WIRING DIAGRAMS
Fig. 10: Power Seat System
1989 Audi 80

For DIAKOM-AUTO http://www.diakom.ru Taganrog support@diakom.ru (8634)315187
Copyright © 1998 Mitchell Repair Information Company, LLC
Monday, October 30, 2000 12:40PM

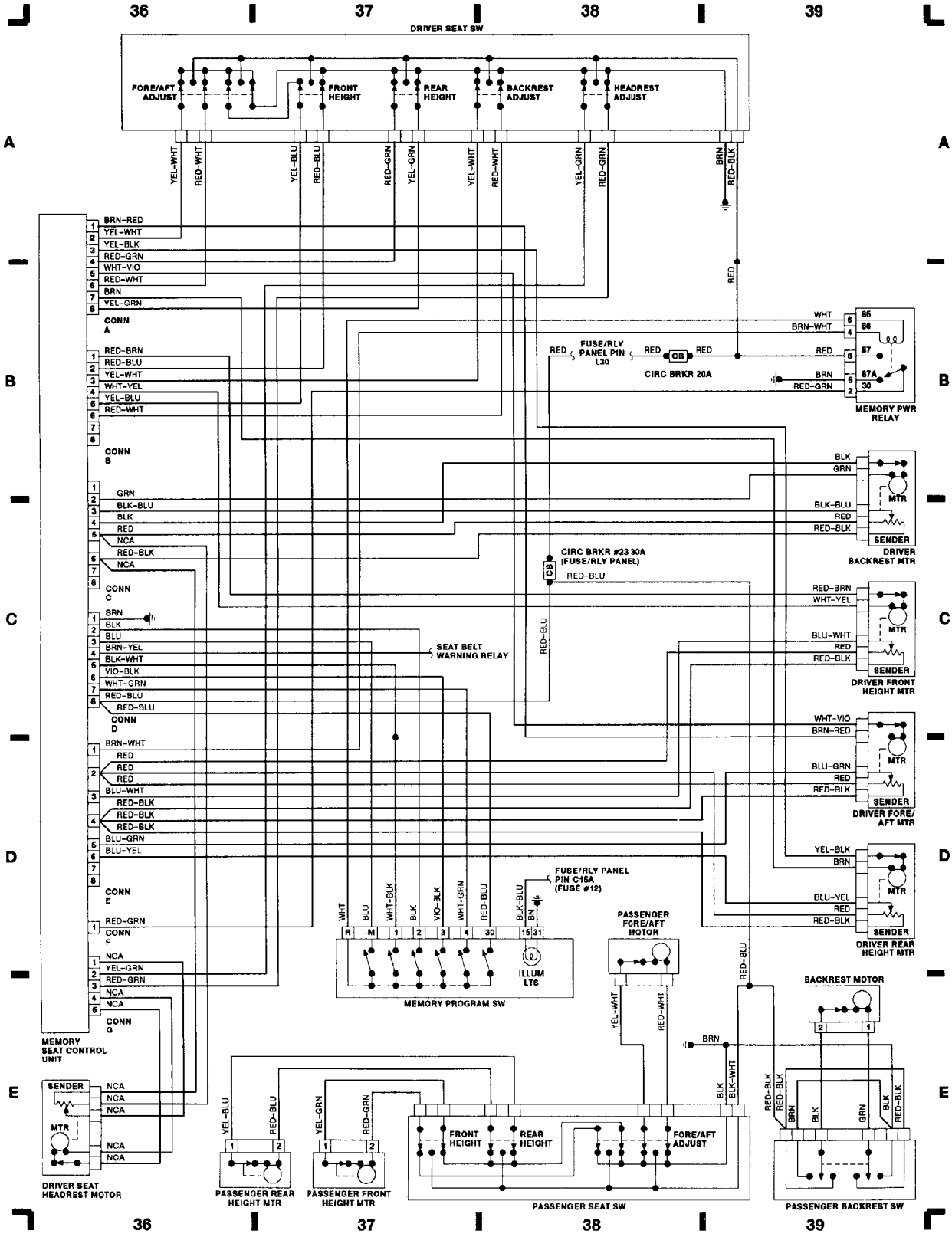

90F11135