WIRING DIAGRAMS
Fig. 10: Power Seat System (Grid 36-39)
1990 Audi 80
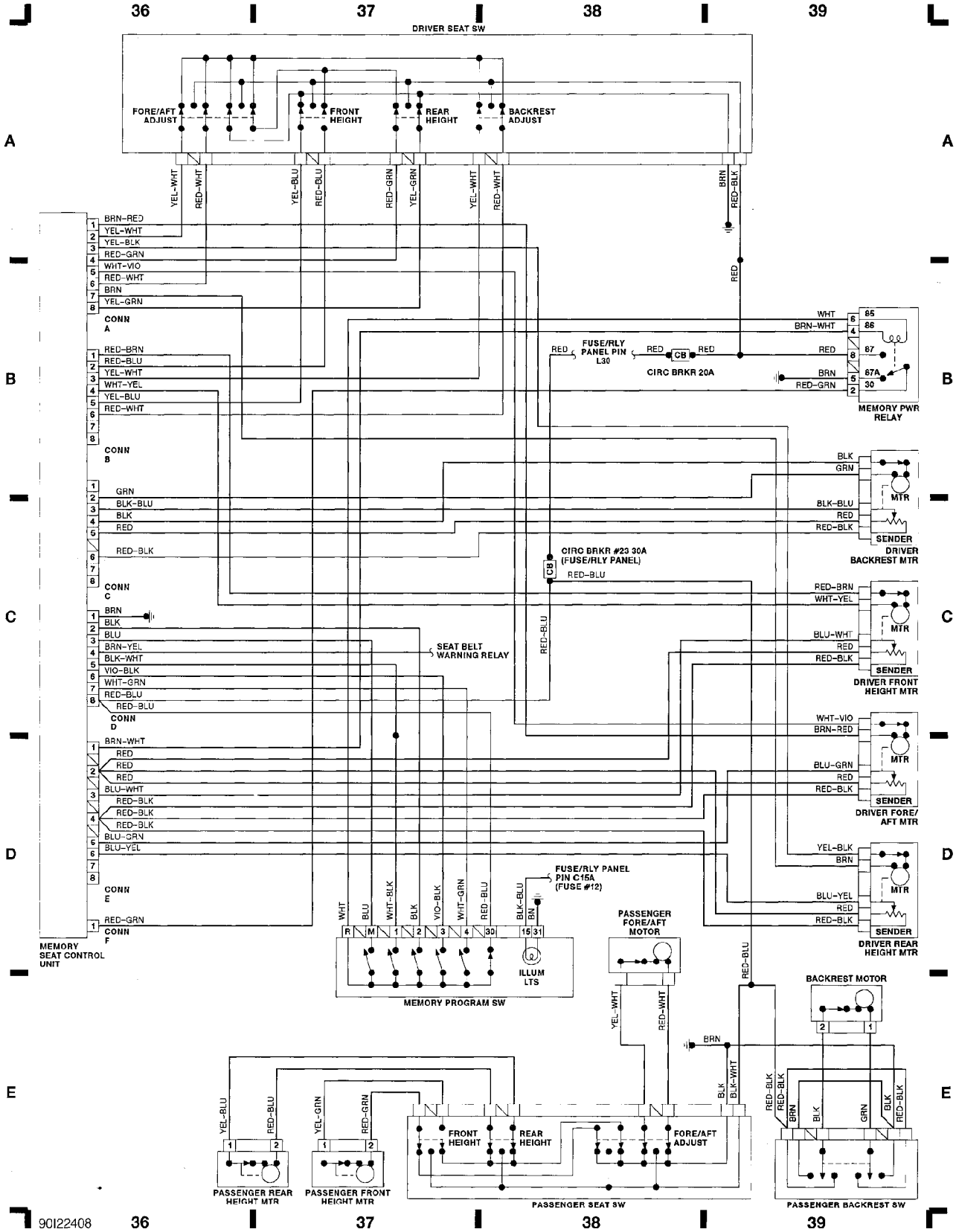
For DIAKOM-AUTO http://www.diakom.ru Taganrog support@diakom.ru (8634)315187
Copyright © 1998 Mitchell Repair Information Company, LLC
Monday, October 30, 2000 01:24PM