WIRING DIAGRAMS

Fig. 9: A/C Ctrl Unit, A/C Compressor Clutch Rly (Grid 32-35)

1993 Audi 90

For DIAKOM-AUTO http://www.diakom.ru Taganrog support@diakom.ru (8634)315187
Copyright © 1998 Mitchell Repair Information Company, LLC
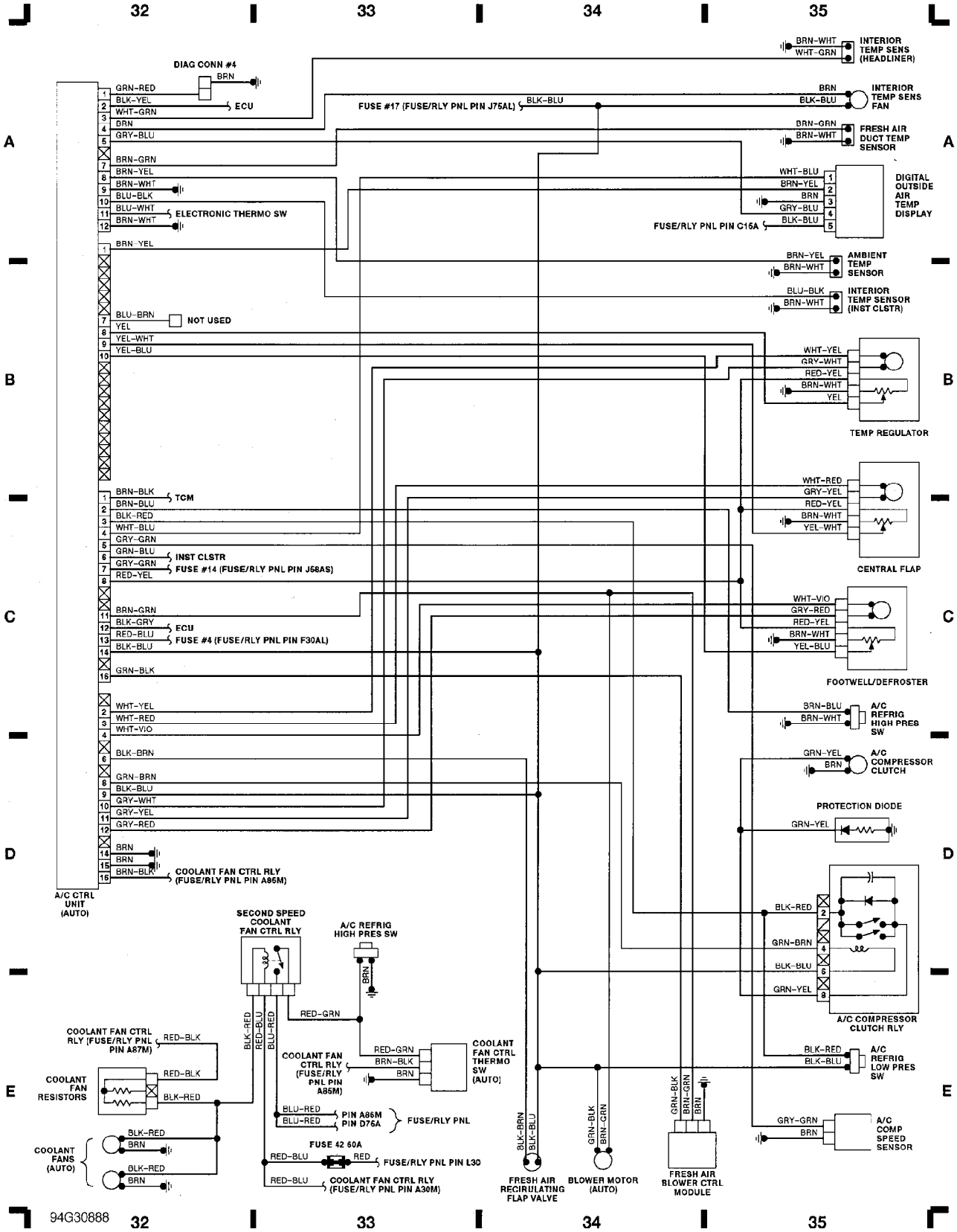
Monday, October 30, 2000 03:40PM