WIRING DIAGRAMS

Fig. 3: Transmission Ctrl Module, Gear Select Sw (Grid 8-11)

1993 Audi 90

For DIAKOM-AUTO http://www.diakom.ru Taganrog support@diakom.ru (8634)315187
Copyright © 1998 Mitchell Repair Information Company, LLC
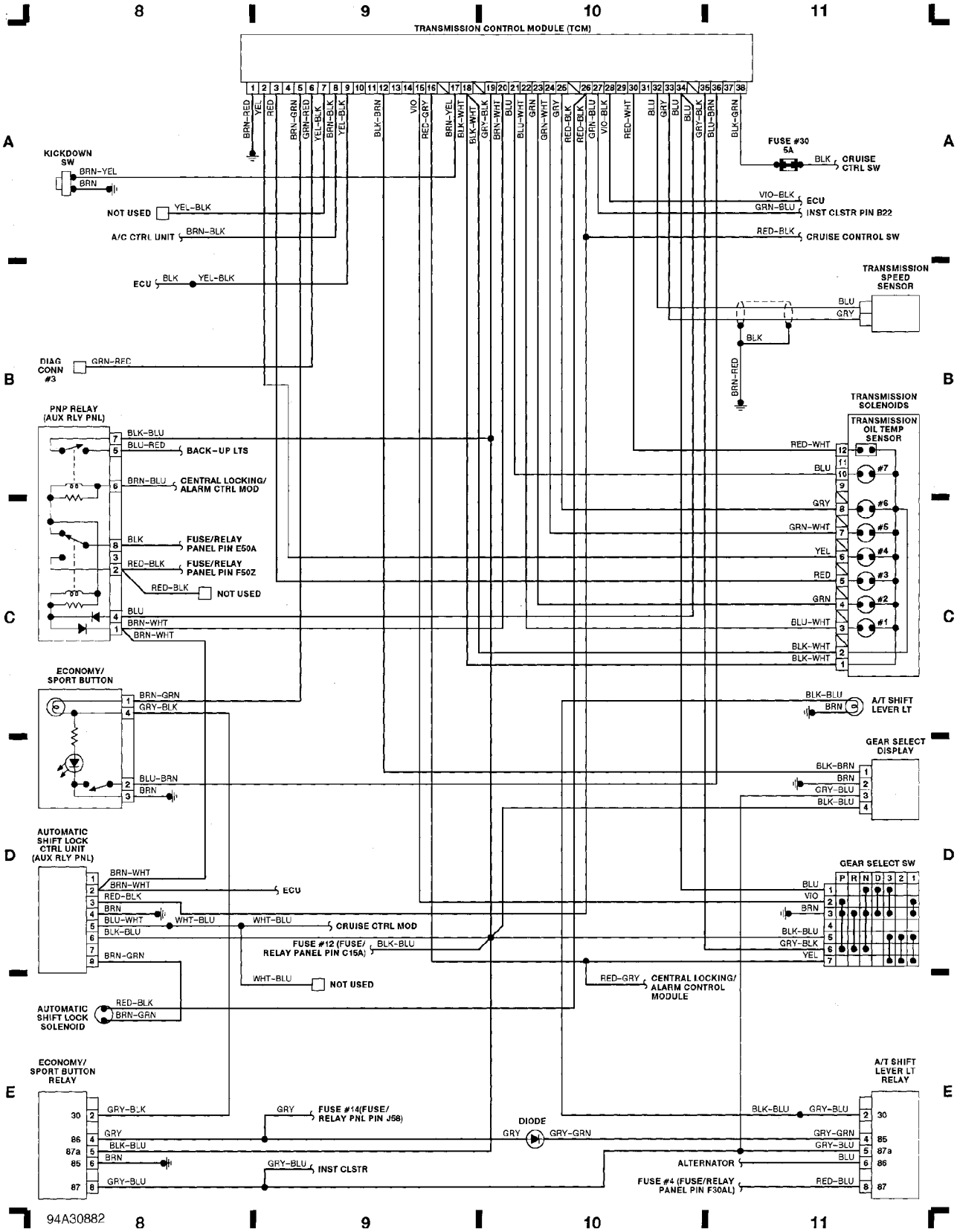
Monday, October 30, 2000 03:39PM